Centre Fix Post Support
GALVANISED

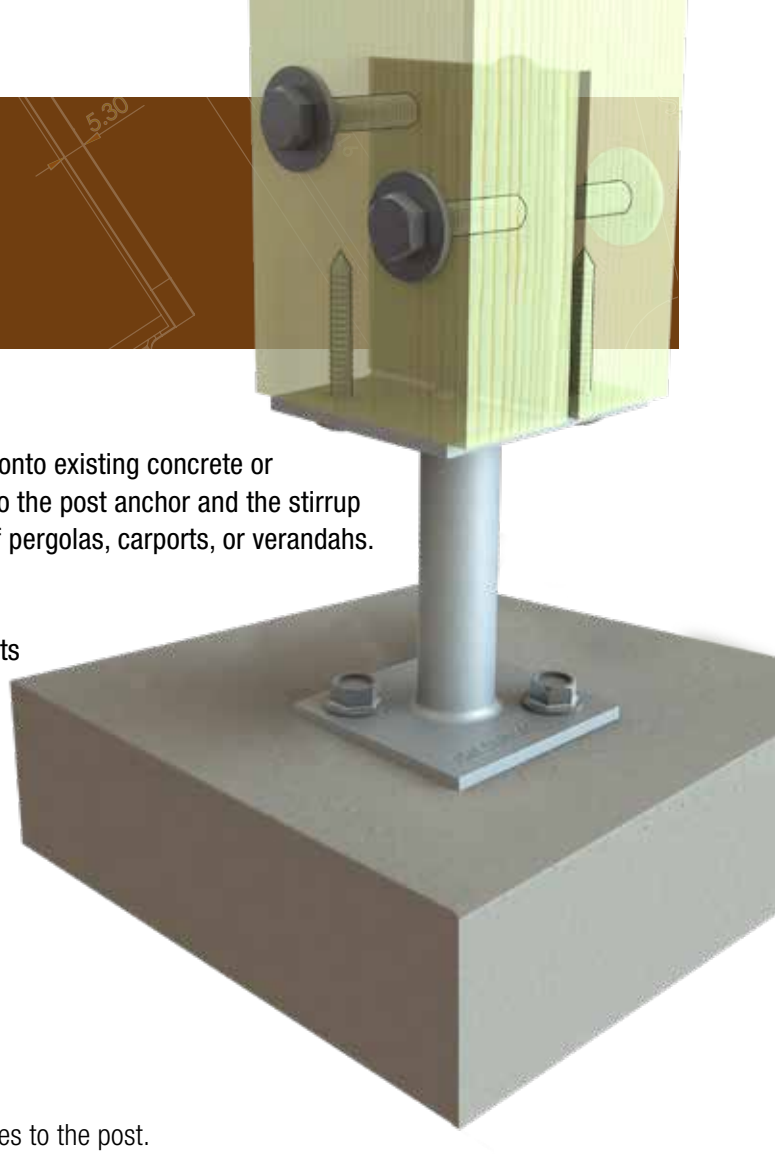

Application

The Bremick® Centre Fix Post Support is used for locating posts onto existing concrete or decks or setting into concrete. Used when installing the post onto the post anchor and the stirrup needs to be concealed. Typically used, during the construction of pergolas, carports, or verandahs.

Advantages

The Bremick® Centre Fix Post Support provides numerous benefits including:

- Facilitates the ability to conceal the stirrup.
- Hot dipped Galvanised coating for long term protection against corrosion.
- 4mm thickness in the post anchor for extra strength.
- Solid steel leg provides support to the structure and resistance to uplift forces.
- Designed and engineered to Australian National Construction Code (NCC).
- Product design conforms to Australian Standards.
- AS3660.1 – 2014, Protection of Buildings from Termites.
- AS1397 -2021 for Steel Grade 250
- The stems are sealed to prevent the unseen entry of the termites to the post.
- Welded construction for strength.
- Range of post anchors that accommodate common square post sizes and 130mm and 300mm leg lengths.

Specifications

Steel Grade	G250
Coating	Hot Dipped Galvanised (HDG)
Thickness	4mm
Stirrup Blade Height	100mm
Stirrup Blade Width	75mm
Stem Height	130mm, 300mm
Stem Diameter	25mm
Fasteners	M10 Bolts, Nuts and Washers

AS1684 & AS1720 Compliant

Engineered Performance Compliance Tested

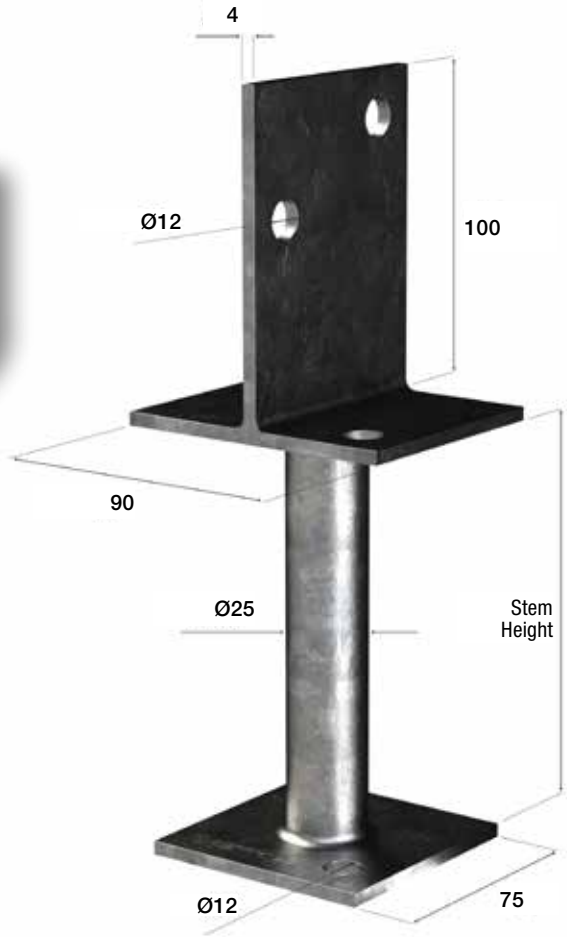

Bremick® Ranging

Product Code	Suits Post	Coating	Pack Qty
PCFG130000404	130mm leg (Suits M10 Bolts)	HDG	6
PCFG300000404	300mm leg (Suits M10 Bolts)	HDG	6

Installation Instructions

Fixing to existing concrete slab or patio

1

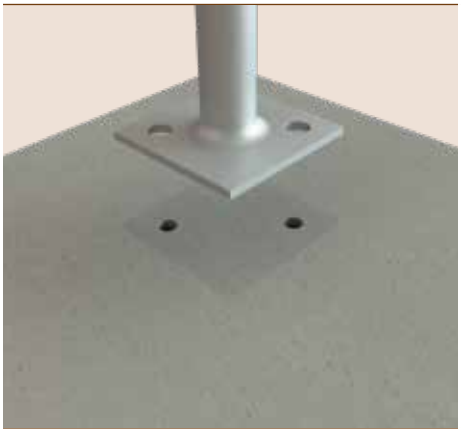

- Determine the centerline of the posts in both projection and width.
- Make sure the post anchor is square to both these directions and mark the hole locations of the post anchor via the bolt holes in the plate at the base of the stem.
- Remove the post anchor and drill the holes where the marks are. A hammer drill works well. Drill to the appropriate width and depth to accommodate the appropriate Bremick concrete screw-in anchor. Suggested minimum screw embedment depth is 100mm.

2

- Replace the post anchor over the drilled holes, ensure the holes within the base plate are over the top of the pre-drilled holes.
- With a spirit level make sure the post anchor is perpendicular to the patio or concrete slab. If not, washers can be used between the post anchor and concrete to level the post anchor.
- Place the concrete screw-in anchor through the holes in the post anchor base plate and into the pre-drilled holes.
- Tighten the screw-in anchor down onto the post anchor's base plate.

3

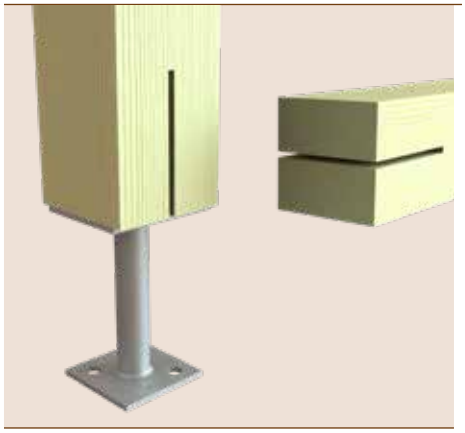

- Use a circular saw to cut a 5mm slot through the centre of the post to a depth of 100mm.
- Mark side hole locations onto the post using another Centre Fix Post Anchor blade as a stencil.
- Place timber upright over the centre fix flange. Ensure the post bears onto the base of the bracket and is vertically plumb.

4

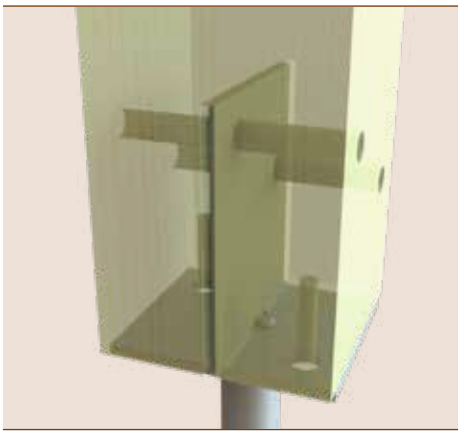

- Drill holes to accommodate M10 bolts either side of the timber, meeting at the middle holes of the blade of the post anchor. Ensure drill through holes are horizontally levelled and perpendicular to saddle.

5

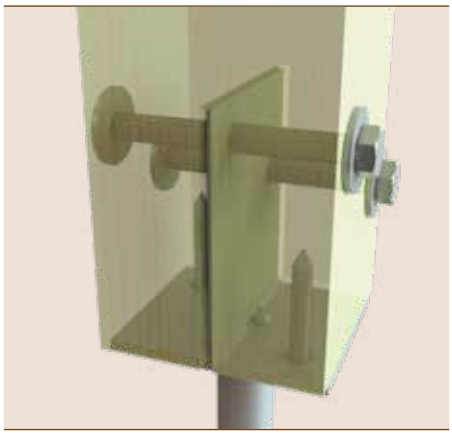

- Feed the 2 x M10 bolts through the bolt holes of the centre blade and timber post. Locate washer and nuts onto the bolts and tighten. A minimum of 2 x thread pitch should extend beyond the outward surface of the nut.

Installation Instructions

Fixing to wet concrete

1

- Determine the centerline of the posts in both projection and width.
- Make sure the post anchor is square to both these directions and orientate it as required.
- Measure and mark the location of the post anchor positioning.
- Ensure the location of the footing is on level ground and set into stable soil. i.e. Class A and S foundation classification to AS2870.
- Dig out the ground and construct formwork to the required depth as specified by your consulting engineer.
- Ensure an allowance is made for the stem to be embedded at least 150mm and there is a 75mm clearance between underside of post to foundation surface.
- Create temporary framing over the dugout.

2

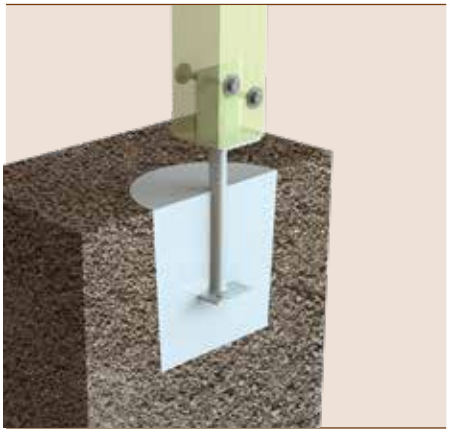

- Position the post anchor in the dugout and suspend using the temporary framing. Ensure the post anchor is vertically plumb and level. Ensure the clearance between underside of post to concrete slab finish surface is at least 75mm.
- Pour the concrete and allow to set.

3

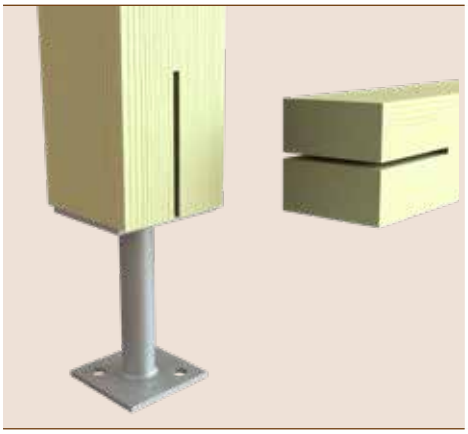

- Use a circular saw to cut a 5mm slot through the centre of the post to a depth of 100mm.
- Mark side hole locations onto the post using another Centre Fix Post Anchor blade as a stencil.

4

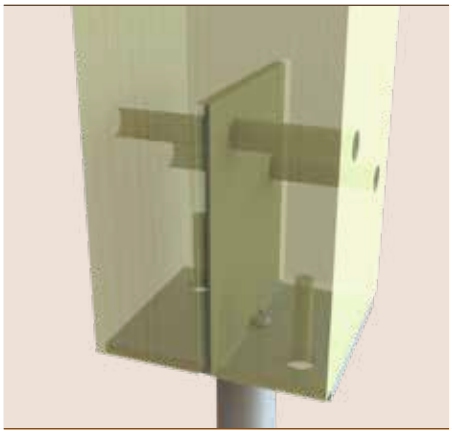

- Place timber upright over the centre fix flange. Ensure the post bears onto the base of the bracket and is vertically plumb.
- Drill holes to accommodate M10 bolts either side of the timber, meeting at the middle holes of the blade of the post anchor. Ensure drill through holes are horizontally levelled and perpendicular to saddle.

5

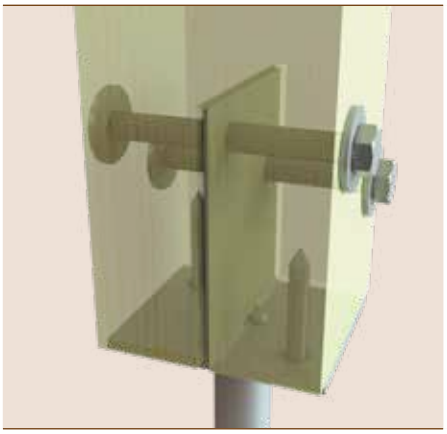

- Feed the 2 x M10 bolts through the bolt holes of the centre blade and timber post. Locate washer and nuts onto the bolts and tighten. A minimum of 2 x thread pitch should extend beyond the outward surface of the nut.
- Alternatively M10 x 75mm coach screws can be used to secure the post to the stirrup.

Technical Data

CENTRE FIX POST SUPPORT

LIMIT STATE UPLIFT CAPACITY (WIND LOAD)

Table 1 CAPACITY: FOR **2 x M10** BOLTS

PRODUCT	CAPACITY (ALL JOINT GROUPS) (KN)
POST SUPPORT CENTRE FIXED	11.8

LIMIT STATE COMPRESSION CAPACITY (ALL LOAD COMBINATION)

Table 3

Leg Height (mm)	1.2G+1.5Q (KN)
130	15
300	10

REMARKS

- The same capacity applies for all load Category 1 (secondary members.) Category 2 (primary members) and Category 3 (post disaster structures primary members.)
- Uplift values applicable when base bolted down tight to a hard level surface such as concrete or steel
- Uplift values may be limited by the capacity of the fixings to the base material. See appropriate Bremick fastener capacities.

Downward values applicable when:

- The post stirrup is sitting on a level surface and secure fixed in place.
- The timber post is securely bolted/coach screwed.
- The post is centred in the post stirrup.
- The post is sitting down snug into in the post stirrup (no gap between stirrup and timber post.)